REACH & RoHS COMPLIANT

REV.	ECN / DESCRIPTION	BY	DATE
A0	NEW	Sunny.Xu	2018.03.08

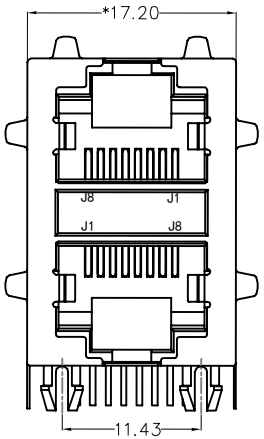

FRONT VIEW

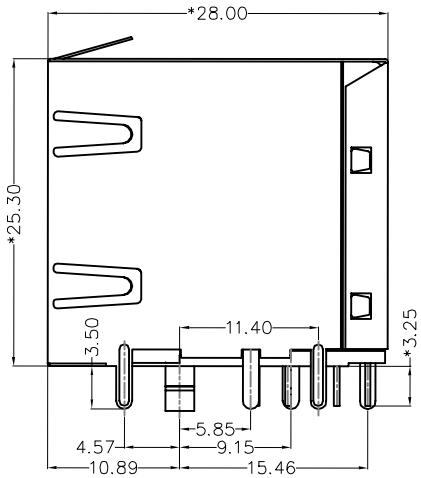

RIGHT SIDE VIEW

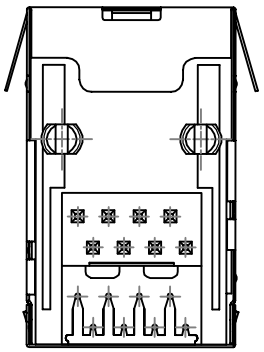

BOTTOM VIEW

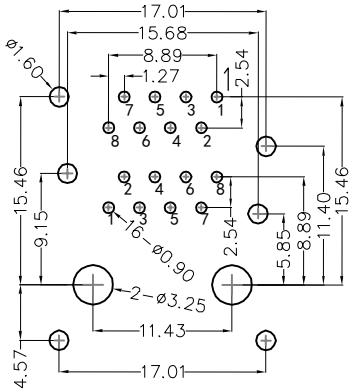

RECOMMENDED PCB LAYOUT
VIEWED FROM COMPONENT SIDE

MATERIAL:

HOUSING: PBT,UL94V-0,BLACK.
TERMINAL: PHOSPHOR BRONZE Ø=0.46MM, G/FU" GOLD PLATING.
SHIELD: C2680,T=0.20MM,20 MIN NICKEL PLATING
ON ALL AREA.

MACHANICAL:

DURABILITY: 750 CYCLES MIN,12.5MM/MINUTE.
INSERTION FORCE: 2.2KG.F MAX.
RETENTION STRENGTH : 7.7KG.F BETWEEN JACK AND PLUG.
OPERATING TEMPERATURE: -40℃～+85℃.
STORAGE TEMPERATURE: -40°C~+85°C.
ALL CRITICAL DIMENSIONS WITH "*"

ELECTRICAL:

VOLTAGE: 125 VOLTS AC.
CURRENT RATING : 1.5AMP.
DIELECTRIC STRENGTH: 1000 VAC RMS 50HZ OR 60HZ,1MIN.
INSULATION RESISTANCE: 500 MEGA OHMS MIN. INITIAL
AFTER 500V DC FOR 1 MINUTE.
CONTACT RESISTANCE: SINGLE TERMINAL 30 MILLIOHMS MAX.
INITIAL 50 MILLIOHMS MAX. AFTER
DURABILITY TEST.

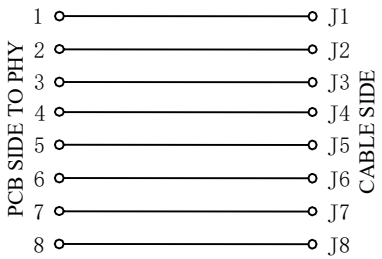

VOOHU 苏州沃虎电子科技有限公司 Su Zhou Voohu Electronic Tech.Co.Ltd	TITLE: RJ45 5921 2*1	SIZE A4	UNITS MM[INCH]	GENERAL TOLERANCES UNLESS SPECIFIED		APPROVED BY: Geoffrey.Song
	PART NO.: SYT59212188HWA1DY1C022短体	SACLE 1:1	REV A0	x±0.35	x°±3.0°	CHECKED BY: Elvis.Song
				.x±0.30	.x°±2.0°	
TEL: +86 400 1048 018	WEB: WWW.WOHU-TEK.COM	REMARK:	SHEET 1/1	.xx±0.25	.xx°±1.5°	DESIGND BY: Sunny.Xu
				.xxx±0.10	.xxx°±1.0°	