REACH & RoHS COMPLIANT

＊所有原料材质,生产制程,电镀必须符合HF要求

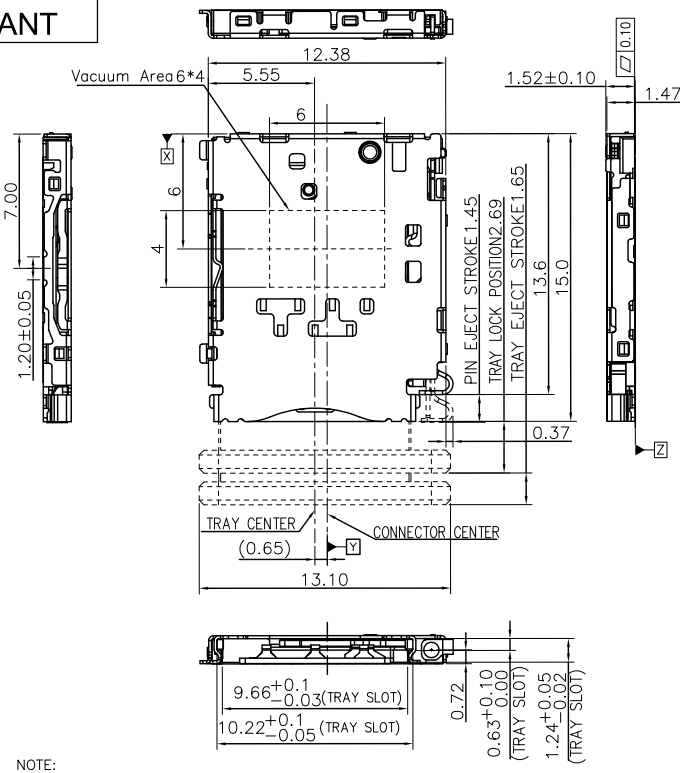

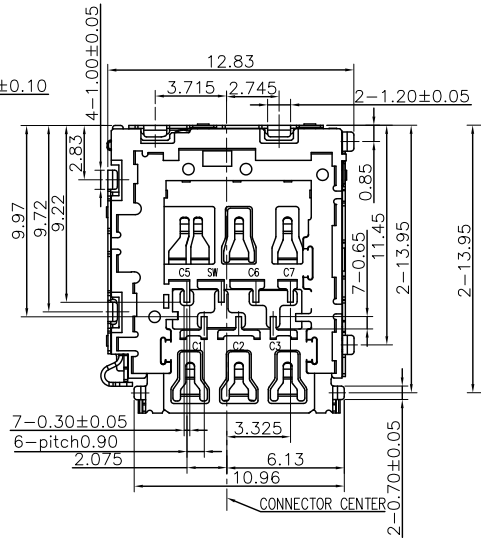

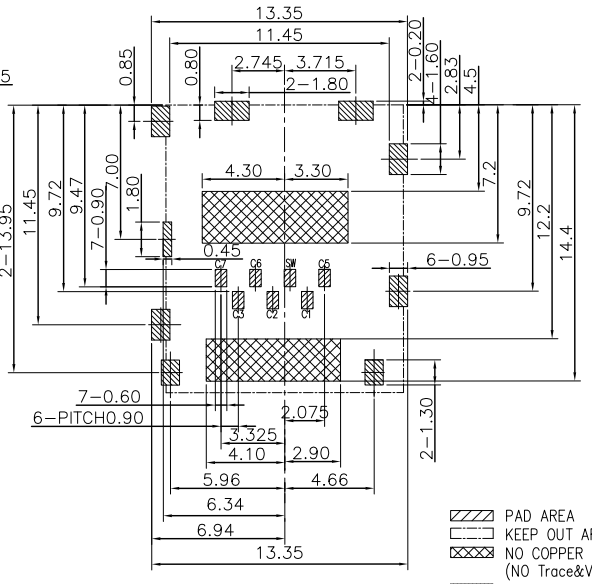

RECOMMEND P.C.B LAYOUT
(General tolerance ±0.05)

COMPOSITION OF DETECTION
CARD DETECT(SW)
C5 ○—○ ○—○ SW
CARD DETECTION/SWITCH
CARD INSTALLATION:ON NON CARD:OFF

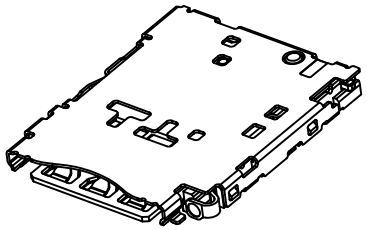

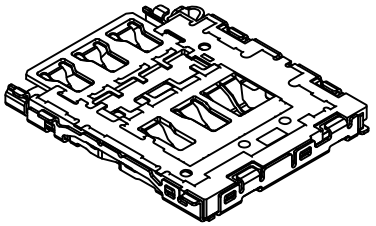

NOTE:
1. Material:
   1−1 Housing:High Temperature Thermoplastic,(LCP S475)Color Black UL 94V−0
   1−2 Contact: Phosphor Bronze(C5210R−H,T=0.08±0.01mm)
   1−3 Cover: SUS304−H T=0.15±0.03mm
2. Plating:
   2−1 Contact terminal:
   Contact area: Gold 1u" Min.
   Solder area: Gold 0.8u" Min .
   Underplating: Ni overall 50U" Min.
   2−2 Cover:
   Underplating: Ni overall 30U" Min.
   Solder area: Gold 0.8u" Min .
3. Specification:
   3−1.Current Rating :0.5A max.
   3−2.Contact Resistance: 50 mOhms max
   3−3.Insulation Resistance:1000 MOhms min./500VDC
   3−4.Dielectric Withstanding Voltage:500 V AC/1minute
   3−5.Operating Temperature:−40°C to+85°C
   3−6.Mating Cycles:5000 Insertions
4. Product Compliant to RoHs Directive 2002/95/EC and ELV 2000/53/EC
5. Part Must Comply Taisol HF WD−3−I−091 Specification.
6. Recommending A Metal More Than 0.15mm Thick.
   Please Confirm Solderadility, If Use A Metal Mask Less Than 0.15mm Thick.

SIM Card Pin Assignments

NANO SIM CARD	
C1	Vcc
C2	RST
C3	CLK
C5	GND
SW	CD/SW
C6	Vpp
C7	DATA

VOOHU 苏州沃虎电子科技有限公司 Su Zhou Voohu Electronic Tech.Co.Ltd	TITLE: NANO SIM H1.5 CARD(无喷码)	SIZE A4	UNITS MM[INCH]	GENERAL TOLERANCES UNLESS SPECIFIED		APPROVED BY: Geoffrey.Song
	PART NO.: WHNS150-T1131-18	SACLE 1:1	REV A0	x±0.35	x°±3.0°	CHECKED BY: Elvis.Song
				.x±0.30	.x°±2.0°	
TEL: +86 400 1048 018	WEB: WWW.WOHU-TEK.COM	REMARK:	SHEET 1/1	.xx±0.25	.xx°±1.5°	DESIGND BY: Sunny.Xu
				.xxx±0.10	.xxx°±1.0°	