REACH & RoHS COMPLIANT

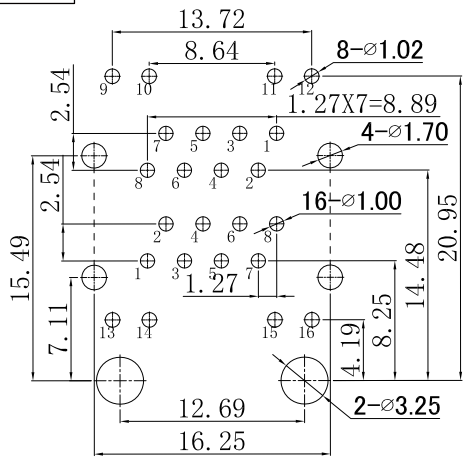

PC Board Layout

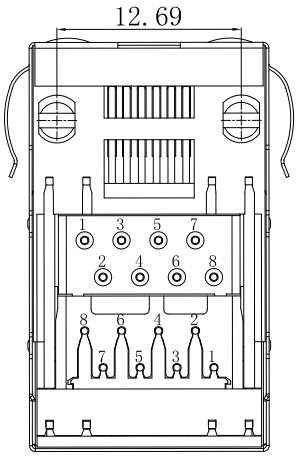

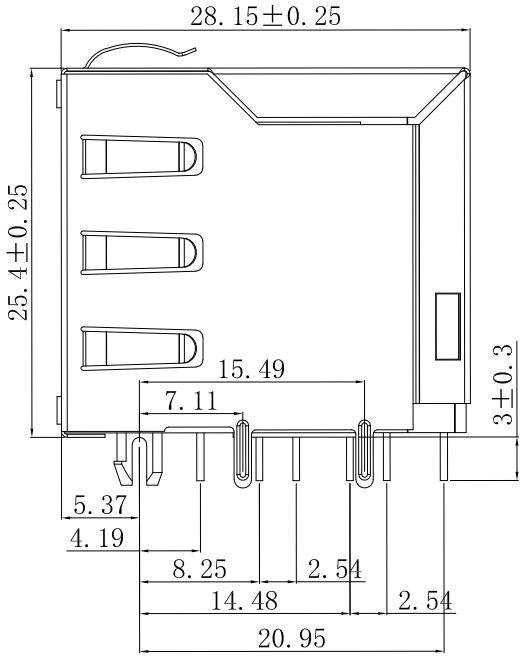

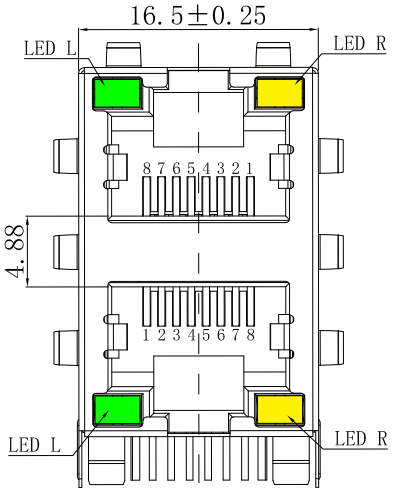

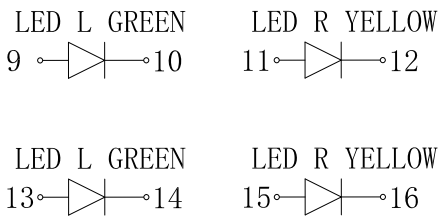

NOTES:

ELECTRICAL:

1. VOLTAGE RATING: 125V AC.
2. CURRENT RATING: 1.5A.
3. CONTACT RESISTANCE: 30 mΩ MAX.
4. INSULATION RESISTANCE: 500 MΩ MIN @ 500V DC.
5. DIELECTRIC STRENGTH: 1000V AC 50Hz or 60Hz, 1MIN.

MECHANICAL:

1. INSERT MATERIAL: UL94V-0.
2. CONTACT MATERIAL: Ø0.46mm C51000(QSn4-0.3)PHOSPHOR BRONZE GOLD PLATING OVER NICKEL.
3. SHIELD: 0.20mm THICKNESS H65Y BRASS NICKEL PLATED.
4. MATING/UNMATING FORCE: 20N Max.
5. RETENTION STRENGTH: 50N pendant 60±5s.
6. OPERATING LIFE: 750 CYCLES MIN.

ENVIRONMENTAL:

1. STORAGE: -40℃ ～ +85℃ RELATIVE HUMIDITY<70%.
2. OPERATION: -40℃ ～ +85℃.

SYT59C31881131101

LED STYLE(LED 颜色类型):
1-L LED:GREEN, R LED:YELLOW(左绿右黄)

PLASTIC(塑料):
1-PBT;
3-NYLON46(尼龙46)

COLOR(颜色):
1-BLACK(黑色)

GOLD PLATING(镀金厚度):
1-FU″;2-1.5U″;3-3U″;4-6U″;
5-15U″;6-30U″;7-50U″

VOOHU 苏州沃虎电子科技有限公司 Su Zhou Voohu Electronic Tech.Co.Ltd	TITLE: 5921S LED 2X1 8P8C-D EMI(左绿右黄)	SIZE A4	UNITS MM[INCH]	GENERAL TOLERANCES UNLESS SPECIFIED		APPROVED BY: Geoffrey.Song
	PART NO.: SYT59C31881131101	SCALE 1:1	REV A0	x±0.35	x°±3.0°	CHECKED BY: Elvis.Song
TEL: +86 400 1048 018	WEB: WWW.WOHU-TEK.COM	REMARK:	SHEET 1/1	.x±0.30	.x°±2.0°	DESIGNED BY: Sunny.Xu
				.xx±0.25	.xx°±1.5°	
				.xxx±0.10	.xxx°±1.0°	