REACH & RoHS COMPLIANT

REV. 版本	ECN NO. 变更说明	DATE 日期
A-D	见老版图纸	
E.	修改图纸	2017. 08. 08.
F.	调整图纸	2018. 12. 20.
G	调整标注	2023. 02. 08

NOTE:
MATERIAL:
1. CONTACT: PHOSPHOR BRONZE.
2. CONNECTOR HOUSING: LCP UL 94V-0. COLOR: BLACK.
3. MOULDED INSERT: HIGH TEMPERATURE PLASTIC UL 94V-0. COLOR:BLACK.
4. CAGE: COPPER ALLOY.
5. LIGHT PIPES: POLYCARBONATE. UL 94V-0. COLOR:CLEAR
6. LIGHT PIPE HOUSING: PBT UL 94V-0 COLOR:BLACK.

PLATED:
1. CONTACT MATING AREA : PLATING GOLD OVER 1.27 MICROMETERS MINIMUM NICKEL.
2. CONTACT NEEDLE EYE: 2.54 MICROMETERS MINIMUM MATTE TIN OVER 1.27 MICROMETERS MINIMUM NICKEL.

MECHANICAL REQUIREMENT:
1. DURABILITY: 100 CYCLES MIN.
2. INSERTION AND EXTRACTION FORCE: 40N MAX & 11.5N MAX

ENVIRONMENTAL:
1. LOW LEVEL CONTACT RESITANCE(LLCR): ΔR 10 MILLIOHMS MAXIMUM FOR SHIELD AND SIGNAL CONTACTS.
2. DIELECTRIC WITHSTANDING VOLTAGE: 300V AC/MAX.
3. INSULATION RESISTANCE: $1x10^9$ OHMS MINIMUM.
4. RATINGS CURRENT: 0.5 AMPS MAX.
5. RATINGS VOLTAGE: 30 VOLTS DC/AC(RMS) MAX.
6. OPERATION: -40°C~+85°C.
7. STORAGE: -55°C~+105°C.
8. ROHS COMPLIANT

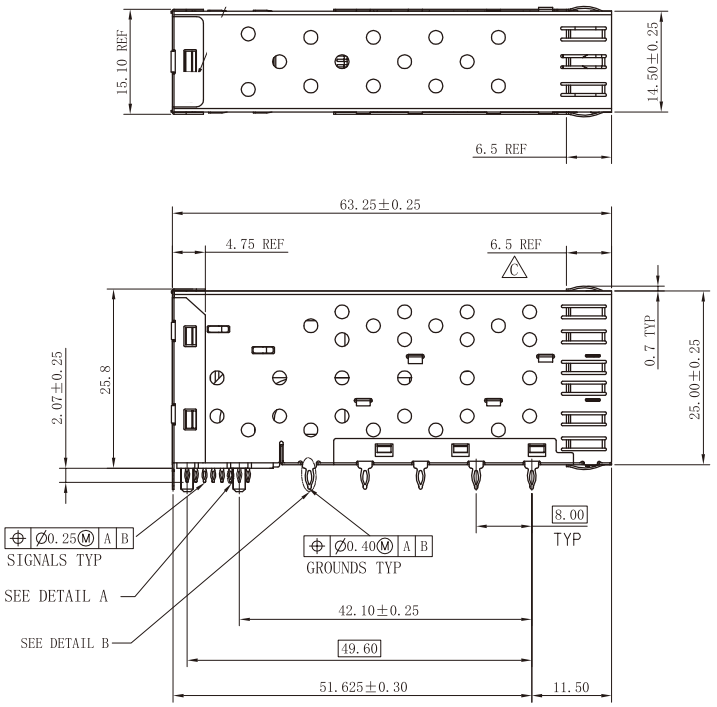

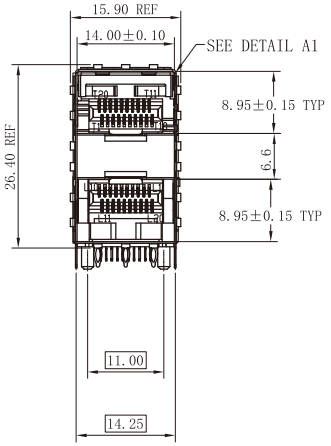

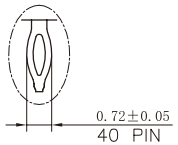

DETAIL A
SCALE 10:1

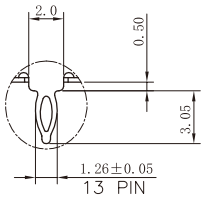

DETAIL B
SCALE 5:1

苏州沃虎电子科技有限公司 Su Zhou Voohu Electronic Tech.Co.Ltd	TITLE: SFP 2X1 PRESS FIT CONNECTOR	SIZE A4	UNITS MM[INCH]	GENERAL TOLERANCES UNLESS SPECIFIED	APPROVED BY: Geoffrey.Song
	PART NO.: WHSFP05121D003	SCALE 1:1	REV A0	x±0.35 / x°±3.0° / .x±0.30 / .x°±2.0°	CHECKED BY: Elvis.Song
TEL: +86 400 1048 018 / WEB: WWW.VOOHU.CN	REMARK: CONTACT PALTING GOLD 15u″	SHEET 1/3		.xx±0.25 / .xx°±1.5° / .xxx±0.10 / .xxx°±1.0°	DESIGNED BY: Sunny.Xu

REACH & RoHS COMPLIANT

REV. 版本	ECN NO. 变更说明	DATE 日期

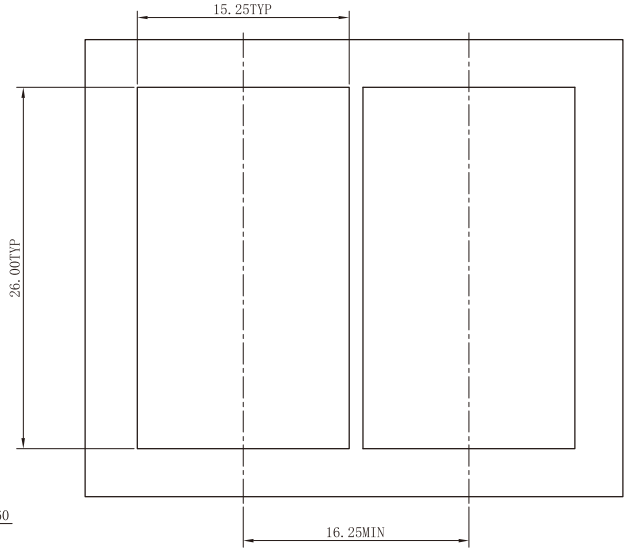

BEZEL CUT-OUT CENTER SPACING DETAIL
BZZEL THICKNESS:0.8-2.6

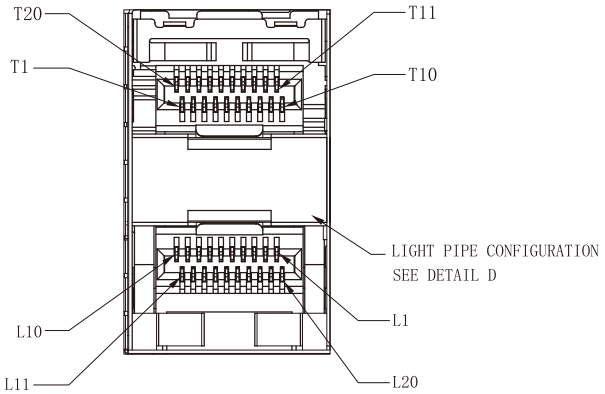

DETAIL A1
SCALE 4:1

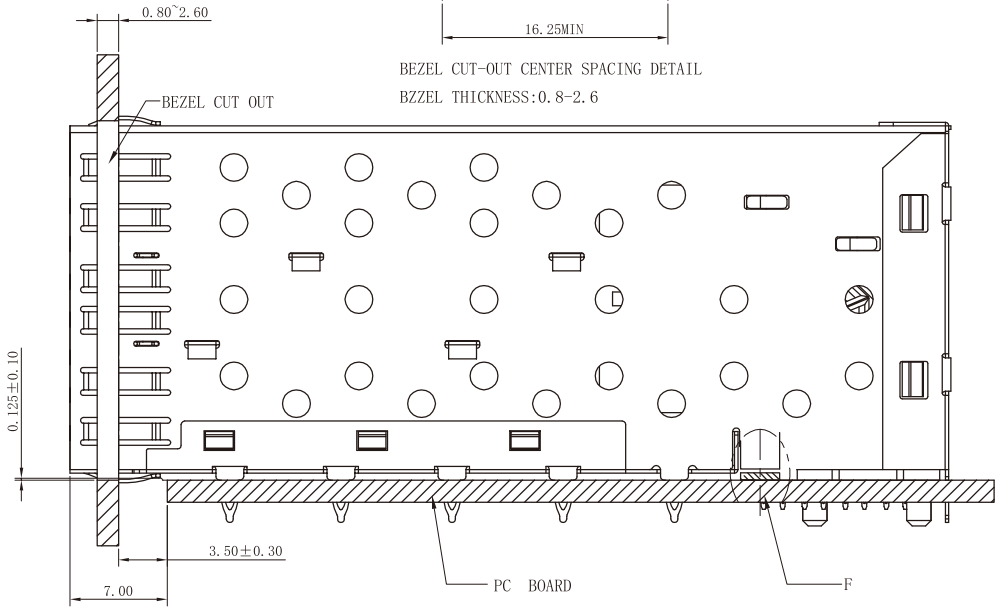

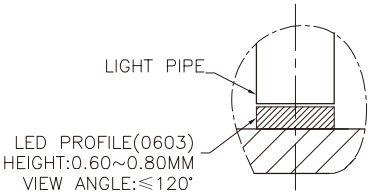

DETAIL F
SCALE 4:1 E

苏州沃虎电子科技有限公司 Su Zhou Voohu Electronic Tech.Co.Ltd	TITLE: SFP 2X1 PRESS FIT CONNECTOR	SIZE A4	UNITS MM[INCH]	GENERAL TOLERANCES UNLESS SPECIFIED	APPROVED BY: Geoffrey.Song
	PART NO.: WHSFP05121D003	SCALE 1:1	REV A0	x±0.35 / x°±3.0°	CHECKED BY: Elvis.Song
				.x±0.30 / .x°±2.0°	
TEL: +86 400 1048 018	REMARK: CONTACT PALTING GOLD 15u″	SHEET 2/3		.xx±0.25 / .xx°±1.5°	DESIGNED BY: Sunny.Xu
WEB: WWW.VOOHU.CN				.xxx±0.10 / .xxx°±1.0°	

REACH & RoHS COMPLIANT

REV. 版本	ECN NO. 变更说明	DATE 日期

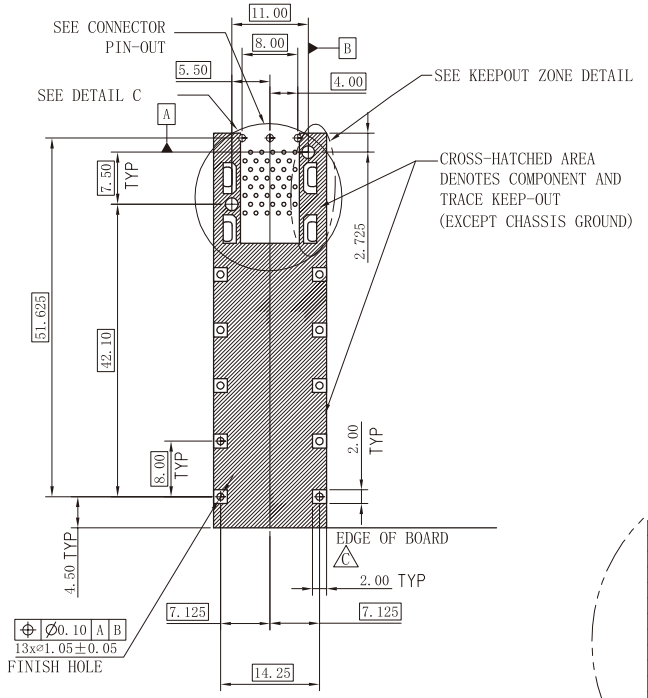

RECOMMENDED PCB LAYOUT-COMPONENT SIDE
RECOMMENDED PCB THICKNESS-2.63MM

THE ENTIRE AREA OF THE CONNECTOR FOOTPRINT
TO BE CONSIDERED THE KEEP OUT AREA FOR COMPONENTS
(OTHER THAN LIGHT PIPE LED'S)
THIS AREA IS INDICATED BY THE DASHED LINE

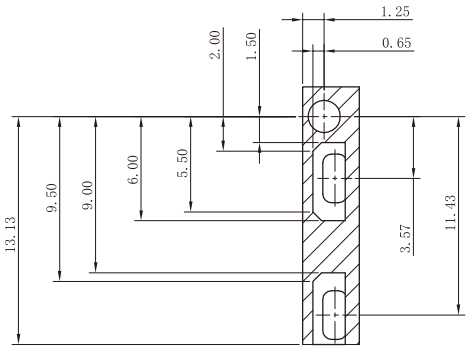

KEEPOUT ZONE
DETAIL SCALE 5:1

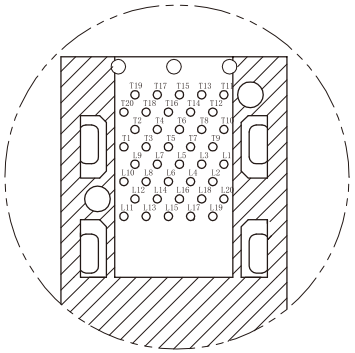

CONNECTOR PIN-OUT
COMPONENT SIDEOF BOARD

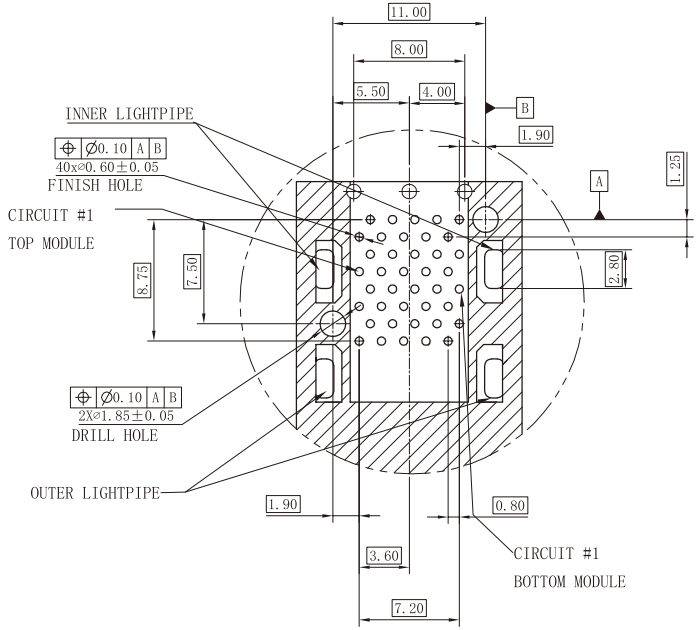

DETAIL C
SCALE 5:1

苏州沃虎电子科技有限公司 Su Zhou Voohu Electronic Tech.Co.Ltd	TITLE: SFP 2X1 PRESS FIT CONNECTOR	SIZE A4	UNITS MM[INCH]	GENERAL TOLERANCES UNLESS SPECIFIED	APPROVED BY: Geoffrey.Song
	PART NO.: WHSFP05121D003	SCALE 1:1	REV A0	x±0.35 / x°±3.0°	CHECKED BY: Elvis.Song
TEL: +86 400 1048 018 / WEB: WWW.VOOHU.CN	REMARK: CONTACT PALTING GOLD 15u″	SHEET 3/3		.xx±0.25 / .xx°±1.5°	DESIGNED BY: Sunny.Xu
				.xxx±0.10 / .xxx°±1.0°	